THE INFORMATION CONTAINED IN THIS DRAWING IS THE SOLE PROPERTY OF DYTRAN INSTRUMENTS INC. ANY REPRODUCTION IN PART OR AS A WHOLE WITHOUT THE WRITTEN PERMISSION OF DYTRAN INSTRUMENTS INC. IS PROHIBITED

MODEL	INPUT RANGE	SENSITIVITY
7533A1-XX	±2g	420 mV/g
7533A2-XX	±3g	300 mV/g
7533A3-XX	±5g	174 mV/g
7533A4-XX	±16g	57 mV/g
7533A5-XX	±200g	6.5 mV/g

REVISIONS

REV.	ECN	DESCRIPTION	BY/DATE	CHK	APPR
C	14900	ZONE 4/D: HEADING: IS: SENSITIVITY WAS: SENSITIVITY (±10%)	AM 03/01/19	KG	LN
D	15400	REVISED CABLE ASSY	KG 11/11/19	AM	LN

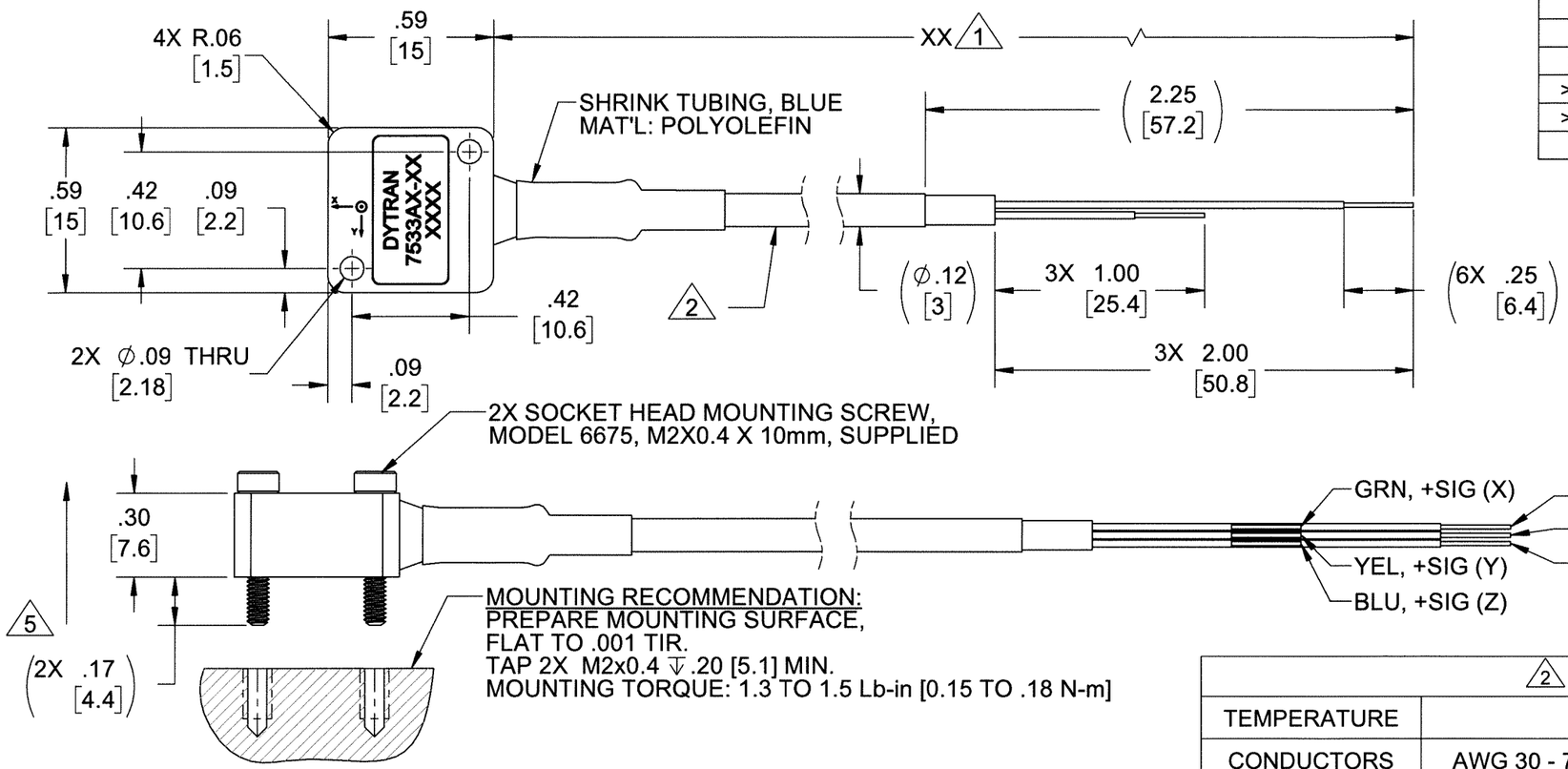

1 CABLE LENGTH TOLERANCE			
ENGLISH		[METRIC]	
≤1FT	+1/ -0 IN	≤0.3m	+25mm -0mm
>1 FT - 5 FT	+2/ -0 IN	.0.3 m-1.5m	+50mm -0mm
> 5 FT - 10 FT	+4/ -0 IN	>1.5m-3m	+100mm -0mm
>10 FT - 25FT	+6 / -0 IN	>3m-7.5m	+150mm -0mm
>25 FT	+5% / -0%	>7.5m	+5%/-0%

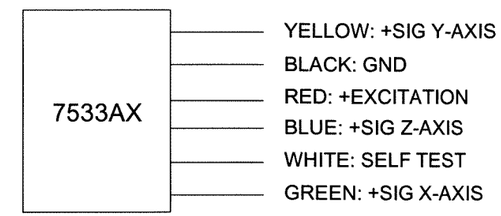

WIRING DIAGRAM

2 CABLE SPECIFICATIONS	
TEMPERATURE	-55°C TO 120°C
CONDUCTORS	AWG 30 - 7/38 TIN PLATED COPPER, SANTOPRENE .007 WALL
BRAID	40 AWG TIN PLATED COPPER BRAID, 90% COVERAGE
JACKET	BLACK, SANTOPRENE, .013 NOM. WALL, Ø.118 MAX

6. OPERATING TEMPERATURE: -40°F TO +185°F. (-40°C TO +85°C)

5 ARROW INDICATE DIRECTION OF ACCELERATION FOR POSITIVE OUTPUT

4. WEGHT: 6.0 GRAMS, MAX. (LESS CABLE)

3. MATERIAL: ALUMINUM ALLOY, ANODIZED, COLOR: BLACK

2 CABLE, 6- CONDUCTORS, 30AWG, SHIELDED, SANTOPRENE JACKET, COLOR: BLACK. SEE TABLE FOR SPECIFICATIONS.

1 MODEL NUMBER: 7533AX-XX. "XX" DENOTES CABLE LENGTH IN FEET (MAXIMUM CABLE LENGTH 50 FT.). SEE TABLE FOR CABLE LENGTH TOLERANCE.

NOTES: UNLESS OTHERWISE SPECIFIED

UNLESS OTHERWISE SPECIFIED:
INTERPRET DIM & TOL PER ASME Y14.5M - 1994.
REMOVE BURRS.
COUNTERSINK INTERNAL THDS 90° TO MAJOR DIA.
CHAM EXT THDS 45° TO MINOR DIA.
THD LENGTHS AND DEPTHS ARE FOR MIN FULL THDS.
DIMENSIONS APPLY AFTER FINISHING.

ALL MACHINED SURFACES 63
TOTAL RUNOUT WITHIN .005.
BREAK SHARP EDGES .005 TO .010.
MACHINED FILLET RADII .005 TO .015.
WELDING SYMBOLS PER AWS A2.4.
ABBREVIATIONS PER MIL-STD-12.

UNLESS OTHERWISE SPECIFIED: DIMENSIONS ARE IN INCHES. DIMENSIONS IN BRACKETS [ ] ARE IN MILLIMETERS TOLERANCES ARE:

DECIMALS	METRIC	ANGLES
.XX ±.03	.X ±0.8	±1°
.XXX ±.010	.XX ±0.25	

APPROVALS		DATE
ORIG	LN	07/03/13
CHK	EP	02/12/16
APP	LN	02/12/16

DO NOT SCALE DRAWING

THIRD ANGLE PROJECTION USA

DYTRAN INSTRUMENTS, INC. Chatsworth, CA

MASTER ONLY IF IN RED

TITLE: OUTLINE/INSTALLATION DWG, 7533AX SERIES

SIZE	CAGE CODE	DWG NO	REV
B	2W033	127-7533A1-XX	D

SCALE: 2:1 SHEET 1 OF 1

172-0186 REV A

MODEL NUMBER 7533A4	PERFORMANCE SPECIFICATIONS	DOC NO. PS7533A4
	TRIAXIAL , DC ACCELEROMETER	REV H, ECN 17146, 05/15/23

- **LOW COST**
- **WIDE SUPPLY VOLTAGE RANGE**
- **LOW CURRENT CONSUMPTION**

		ENGLISH		SI	
PHYSICAL					
Weight, Max. (less cable)		0.21	oz	6.0	grams
Mounting		2X M2 Screws		2X M2 Screws	
Cable	Type	6-conductor		6-conductor	
	Material	Santoprene		Santoprene	
Housing	Material	Aluminum, Anodized		Aluminum, Anodized	
	Isolation	Case Isolated		Case Isolated	
PERFORMANCE					
Sensitivity, +/-10% [1]		57	mV/g	5.8	mV/m/s2
Acceleration Range, Min.		±16	g pk	±157	m/s2 pk
Frequency Range, -3dB	X,Y axes	0 to 1600	Hz	0 to 1600	Hz
	Z-axis	0 to 550	Hz	0 to 550	Hz
Resonance Frequency		>3	kHz	>3	kHz
Linearity [2]		±0.31	%F.S.	±0.31	%F.S.
Transverse Sensitivity Max		5	%	5	%
Spectral Noise		300	µg RMS/√Hz	2943	µm/s2 RMS/√Hz
Sensitivity Change Due to Temperature		±0.006	%/°F	±0.01	%/°C
ELECTRICAL					
Supply Current		350	µA	350	µA
Supply Voltage Range		4 to 28	VDC	4 to 28	VDC
Output Impedance, Typ.		32	kΩ	32	kΩ
Output Bias Voltage	X,Y axes	1.35 to 1.65	VDC	1.35 to 1.65	VDC
	Z-axis	1.2 to 1.8	VDC	1.2 to 1.8	VDC
		±1.0	VDC	±1.0	VDC
Self-Test Output [2]	X-axis	-29 to -114	mV	-29 to -114	mV
	Y-axis	+29 to +114	mV	+29 to +114	mV
	Z-axis	+29 to +190	mV	+29 to +190	mV
Turn-On Time		1	ms	1	ms
ENVIRONMENTAL					
Shock Max		10,000	g pk	98100	m/s2 pk
Operating Temperature		-40 to +185	°F	-40 to +85	°C
Seal		Epoxy		Epoxy	

Model	Sensitivity (mV/g)	Range (g pk)	Noise (µg RMS/√Hz)	Oper. Temp(°F)
7533A1	420	±2	250	-40 to 185
7533A2	300	±3	175(x,y); 300(z)	-40 to 185
7533A3	174	±5	250	-40 to 185
7533A5	6.5	±200	2700(x,y); 4300(z)	-40 to 185

Please, refer to the performance specifications of the products in this family for detailed description

Supplied Accessories:

1) Accredited calibration certificate (ISO 17025)
2) Mounting Screw, Model 6675, M2x0.4 x 12mm, qty. 2

Notes:

[1] All specifications are at room temperature unless otherwise specified.
[2] Measure using zero-based straight line method, % of F.S. or any lesser range.
[3] In the interest of constant product improvement, we reserve the rights to change specifications without notice.
It is the customer's responsibility to validate that a particular product with the properties described in the product specification is suitable for use in a particular application. Parameters provided in datasheets and / or specifications may vary in different applications and performance may vary over time. All operating parameters, including typical parameters, must be validated for each customer application by the customer's technical experts.

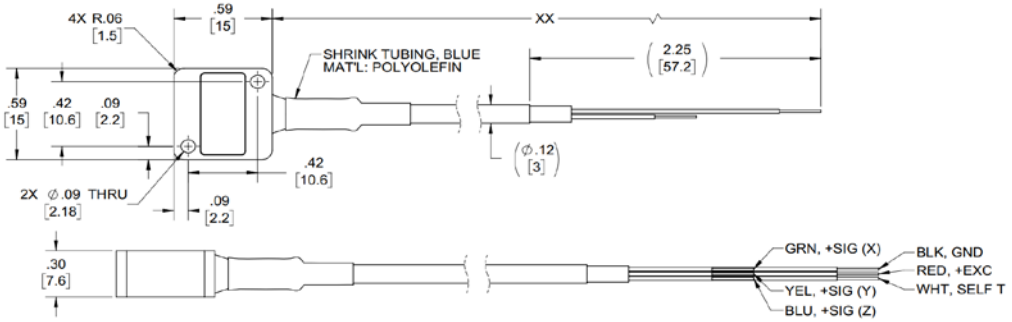

Units on the line drawing are in inches, units in brackets are in millimeters. Refer to 127-7533A1-XX for more information.

DYTRAN INSTRUMENTS, INC.
21592 Marilla Street, Chatsworth, California 91311 Phone: 818.700.7818 Fax:818.698.0362 www.dytran.com

For permission to reprint this content, please contact info@dytran.com